Lab 8.2 - Configuring VLANs and Trunking

Topology

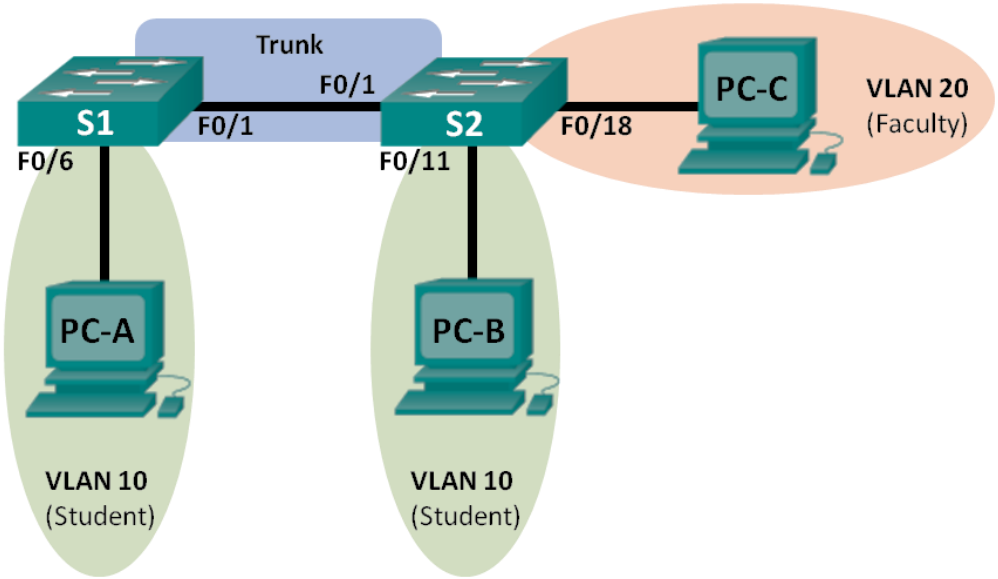

Addressing Table

Device	Interface	IP Address	Subnet Mask	Default Gateway
S1	VLAN 1	192.168.1.11	255.255.255.0	N/A
S2	VLAN 1	192.168.1.12	255.255.255.0	N/A
PC-A	NIC	192.168.10.3	255.255.255.0	192.168.10.1
PC-B	NIC	192.168.10.4	255.255.255.0	192.168.10.1
PC-C	NIC	192.168.20.3	255.255.255.0	192.168.20.1

Objectives

Part 1: Build the Network and Configure Basic Device Settings

Part 2: Create VLANs and Assign Switch Ports

Part 3: Maintain VLAN Port Assignments and the VLAN Database

Part 4: Configure an 802.1Q Trunk between the Switches

Part 5: Delete the VLAN Database

Background / Scenario

Modern switches use virtual local-area networks (VLANs) to improve network performance by separating large Layer 2 broadcast domains into smaller ones. VLANs can also be used as a security measure by controlling which hosts can communicate. In general, VLANs make it easier to design a network to support the goals of an organization.

© 2013 Cisco and/or its affiliates. All rights reserved. This document is Cisco Public.

VLAN trunks are used to span VLANs across multiple devices. Trunks allow the traffic from multiple VLANS to travel over a single link, while keeping the VLAN identification and segmentation intact.

In this lab, you will create VLANs on both switches in the topology, assign VLANs to switch access ports, verify that VLANs are working as expected, and then create a VLAN trunk between the two switches to allow hosts in the same VLAN to communicate through the trunk, regardless of which switch the host is actually attached to.

Note: The switches used are Cisco Catalyst 2960s with Cisco IOS Release 15.0(2) (lanbasek9 image). Other switches and Cisco IOS versions can be used. Depending on the model and Cisco IOS version, the commands available and output produced might vary from what is shown in the labs.

Note: Ensure that the switches have been erased and have no startup configurations. If you are unsure contact your instructor.

Required Resources

- 2 Switches (Cisco 2960 with Cisco IOS Release 15.0(2) lanbasek9 image or comparable)
- 3 PCs (Windows 7, Vista, or XP with terminal emulation program, such as Tera Term)
- Console cables to configure the Cisco IOS devices via the console ports
- Ethernet cables as shown in the topology

Part 1: Build the Network and Configure Basic Device Settings

In Part 1, you will set up the network topology and configure basic settings on the PC hosts and switches.

Step 1: Cable the network as shown in the topology.

Attach the devices as shown in the topology diagram, and cable as necessary.

Step 2: Initialize and reload the switches as necessary.

Step 3: Configure basic settings for each switch.

a. Console into the switch and enter global configuration mode.

b. Copy the following basic configuration and paste it to the running-configuration on the switch.

```
no ip domain-lookup
service password-encryption
enable secret class
banner motd #Unauthorized access is strictly prohibited.#
line con 0
password cisco
login
logging synchronous
line vty 0 15
password cisco
logging synchronous
login
exit
```

c. Configure the host name as shown in the topology.

d. Configure the IP address listed in the Addressing Table for VLAN 1 on the switch.

© 2013 Cisco and/or its affiliates. All rights reserved. This document is Cisco Public.

e. Administratively deactivate all unused ports on the switch.

f. Copy the running configuration to the startup configuration.

Step 4: Configure PC hosts.

Refer to the Addressing Table for PC host address information.

Step 5: Test connectivity.

Verify that the PC hosts can ping one another.

Note: It may be necessary to disable the PCs firewall to ping between PCs.

Can PC-A ping PC-B? _____

Can PC-A ping PC-C? _____

Can PC-A ping S1? _____

Can PC-B ping PC-C? _____

Can PC-B ping S2? _____

Can PC-C ping S2? _____

Can S1 ping S2? _____

If you answered no to any of the above questions, why were the pings unsuccessful?

_____

_____

Part 2: Create VLANs and Assign Switch Ports

In Part 2, you will create student, faculty, and management VLANs on both switches. You will then assign the VLANs to the appropriate interface. The **show vlan** command is used to verify your configuration settings.

Step 1: Create VLANs on the switches.

a. Create the VLANs on S1.

```
S1(config)# vlan 10
S1(config-vlan)# name Student
S1(config-vlan)# vlan 20
S1(config-vlan)# name Faculty
S1(config-vlan)# vlan 99
S1(config-vlan)# name Management
S1(config-vlan)# end
```

b. Create the same VLANs on S2.

c. Issue the **show vlan** command to view the list of VLANs on S1.

```
S1# show vlan

VLAN Name                             Status    Ports
---- -------------------------------- --------- -------------------------------
1    default                          active    Fa0/1, Fa0/2, Fa0/3, Fa0/4
                                                Fa0/5, Fa0/6, Fa0/7, Fa0/8
                                                Fa0/9, Fa0/10, Fa0/11, Fa0/12
```

© 2013 Cisco and/or its affiliates. All rights reserved. This document is Cisco Public.

```
                                                Fa0/13, Fa0/14, Fa0/15, Fa0/16
                                                Fa0/17, Fa0/18, Fa0/19, Fa0/20
                                                Fa0/21, Fa0/22, Fa0/23, Fa0/24
                                                Gi0/1, Gi0/2
10   Student                            active
20   Faculty                            active
99   Management                         active
1002 fddi-default                       act/unsup
1003 token-ring-default                 act/unsup
1004 fddinet-default                    act/unsup
1005 trnet-default                      act/unsup

VLAN Type  SAID       MTU   Parent RingNo BridgeNo Stp  BrdgMode Trans1 Trans2
---- ----- ---------- ----- ------ ------ -------- ---- -------- ------ ------
1    enet  100001     1500  -      -      -        -    -        0      0
10   enet  100010     1500  -      -      -        -    -        0      0
20   enet  100020     1500  -      -      -        -    -        0      0
99   enet  100099     1500  -      -      -        -    -        0      0

VLAN Type  SAID       MTU   Parent RingNo BridgeNo Stp  BrdgMode Trans1 Trans2
---- ----- ---------- ----- ------ ------ -------- ---- -------- ------ ------
1002 fddi  101002     1500  -      -      -        -    -        0      0
1003 tr    101003     1500  -      -      -        -    -        0      0
1004 fdnet 101004     1500  -      -      -        ieee -        0      0
1005 trnet 101005     1500  -      -      -        ibm  -        0      0

Remote SPAN VLANs
------------------------------------------------------------------------------


Primary Secondary Type              Ports
------- --------- ----------------- ------------------------------------------
```

What is the default VLAN? _____

What ports are assigned to the default VLAN?

_____

Step 2: Assign VLANs to the correct switch interfaces.

a. Assign VLANs to the interfaces on S1.

1) Assign PC-A to the Student VLAN.

```
S1(config)# interface f0/6
S1(config-if)# switchport mode access
S1(config-if)# switchport access vlan 10
```

2) Move the switch IP address VLAN 99.

```
S1(config)# interface vlan 1
S1(config-if)# no ip address
S1(config-if)# interface vlan 99
```

© 2013 Cisco and/or its affiliates. All rights reserved. This document is Cisco Public.

```
S1(config-if)# ip address 192.168.1.11 255.255.255.0
S1(config-if)# end
```

b. Issue the **show vlan brief** command and verify that the VLANs are assigned to the correct interfaces.

```
S1# show vlan brief

VLAN Name                             Status    Ports
---- -------------------------------- --------- -------------------------------
1    default                          active    Fa0/1, Fa0/2, Fa0/3, Fa0/4
                                                Fa0/5, Fa0/7, Fa0/8, Fa0/9
                                                Fa0/10, Fa0/11, Fa0/12, Fa0/13
                                                Fa0/14, Fa0/15, Fa0/16, Fa0/17
                                                Fa0/18, Fa0/19, Fa0/20, Fa0/21
                                                Fa0/22, Fa0/23, Fa0/24, Gi0/1
                                                Gi0/2
10   Student                          active    Fa0/6
20   Faculty                          active
99   Management                       active
1002 fddi-default                     act/unsup
1003 token-ring-default               act/unsup
1004 fddinet-default                  act/unsup
1005 trnet-default                    act/unsup
```

c. Issue the **show ip interface brief** command.

What is the status of VLAN 99? Why?

_____

d. Use the Topology to assign VLANs to the appropriate ports on S2.

e. Remove the IP address for VLAN 1 on S2.

f. Configure an IP address for VLAN 99 on S2 according to the Addressing Table.

g. Use the **show vlan brief** command to verify that the VLANs are assigned to the correct interfaces.

```
S2# show vlan brief

VLAN Name                             Status    Ports
---- -------------------------------- --------- -------------------------------
1    default                          active    Fa0/1, Fa0/2, Fa0/3, Fa0/4
                                                Fa0/5, Fa0/6, Fa0/7, Fa0/8
                                                Fa0/9, Fa0/10, Fa0/12, Fa0/13
                                                Fa0/14, Fa0/15, Fa0/16, Fa0/17
                                                Fa0/19, Fa0/20, Fa0/21, Fa0/22
                                                Fa0/23, Fa0/24, Gi0/1, Gi0/2
10   Student                          active    Fa0/11
20   Faculty                          active    Fa0/18
99   Management                       active
1002 fddi-default                     act/unsup
1003 token-ring-default               act/unsup
1004 fddinet-default                  act/unsup
1005 trnet-default                    act/unsup
```

© 2013 Cisco and/or its affiliates. All rights reserved. This document is Cisco Public.

Is PC-A able to ping PC-B? Why?

_____

Is S1 able to ping S2? Why?

_____

Part 3: Maintain VLAN Port Assignments and the VLAN Database

In Part 3, you will change VLAN assignments to ports and remove VLANs from the VLAN database.

Step 1: Assign a VLAN to multiple interfaces.

a. On S1, assign interfaces F0/11 – 24 to VLAN 10.

```
S1(config)# interface range f0/11-24
S1(config-if-range)# switchport mode access
S1(config-if-range)# switchport access vlan 10
S1(config-if-range)# end
```

b. Issue the **show vlan brief** command to verify VLAN assignments.

c. Reassign F0/11 and F0/21 to VLAN 20.

d. Verify that VLAN assignments are correct.

Step 2: Remove a VLAN assignment from an interface.

a. Use the **no switchport access vlan** command to remove the VLAN 10 assignment to F0/24.

```
S1(config)# interface f0/24
S1(config-if)# no switchport access vlan
S1(config-if)# end
```

b. Verify that the VLAN change was made.

Which VLAN is F0/24 now associated with?

_____

Step 3: Remove a VLAN ID from the VLAN database.

a. Add VLAN 30 to interface F0/24 without issuing the VLAN command.

```
S1(config)# interface f0/24
S1(config-if)# switchport access vlan 30
% Access VLAN does not exist. Creating vlan 30
```

Note: Current switch technology no longer requires that the **vlan** command be issued to add a VLAN to the database. By assigning an unknown VLAN to a port, the VLAN adds to the VLAN database.

b. Verify that the new VLAN is displayed in the VLAN table.

```
S1# show vlan brief

VLAN Name                             Status    Ports
---- -------------------------------- --------- -------------------------------
1    default                          active    Fa0/1, Fa0/2, Fa0/3, Fa0/4
                                                Fa0/5, Fa0/6, Fa0/7, Fa0/8
                                                Fa0/9, Fa0/10, Gi0/1, Gi0/2
```

© 2013 Cisco and/or its affiliates. All rights reserved. This document is Cisco Public.

```
10   Student                          active    Fa0/12, Fa0/13, Fa0/14, Fa0/15
                                                Fa0/16, Fa0/17, Fa0/18, Fa0/19
                                                Fa0/20, Fa0/22, Fa0/23
20   Faculty                          active    Fa0/11, Fa0/21
30   VLAN0030                         active    Fa0/24
99   Management                       active
1002 fddi-default                     act/unsup
1003 token-ring-default               act/unsup
1004 fddinet-default                  act/unsup
1005 trnet-default                    act/unsup
```

What is the default name of VLAN 30?

_____

c. Use the **no vlan 30** command to remove VLAN 30 from the VLAN database.

```
S1(config)# no vlan 30
S1(config)# end
```

d. Issue the **show vlan brief** command. F0/24 was assigned to VLAN 30.

After deleting VLAN 30, what VLAN is port F0/24 assigned to? What happens to the traffic destined to the host attached to F0/24?

_____

```
S1# show vlan brief

VLAN Name                             Status    Ports
---- -------------------------------- --------- -------------------------------
1    default                          active    Fa0/1, Fa0/2, Fa0/3, Fa0/4
                                                Fa0/5, Fa0/6, Fa0/7, Fa0/8
                                                Fa0/9, Fa0/10, Gi0/1, Gi0/2
10   Student                          active    Fa0/12, Fa0/13, Fa0/14, Fa0/15
                                                Fa0/16, Fa0/17, Fa0/18, Fa0/19
                                                Fa0/20, Fa0/22, Fa0/23
20   Faculty                          active    Fa0/11, Fa0/21
99   Management                       active
1002 fddi-default                     act/unsup
1003 token-ring-default               act/unsup
1004 fddinet-default                  act/unsup
1005 trnet-default                    act/unsup
```

e. Issue the **no switchport access vlan** command on interface F0/24.

f. Issue the **show vlan brief** command to determine the VLAN assignment for F0/24. To which VLAN is F0/24 assigned?

_____

Note: Before removing a VLAN from the database, it is recommended that you reassign all the ports assigned to that VLAN.

Why should you reassign a port to another VLAN before removing the VLAN from the VLAN database?

_____

_____

© 2013 Cisco and/or its affiliates. All rights reserved. This document is Cisco Public.

Part 4: Configure an 802.1Q Trunk Between the Switches

In Part 4, you will configure interface F0/1 to use the Dynamic Trunking Protocol (DTP) to allow it to negotiate the trunk mode. After this has been accomplished and verified, you will disable DTP on interface F0/1 and manually configure it as a trunk.

Step 1: Use DTP to initiate trunking on F0/1.

The default DTP mode of a 2960 switch port is dynamic auto. This allows the interface to convert the link to a trunk if the neighboring interface is set to trunk or dynamic desirable mode.

a. Set F0/1 on S1 to negotiate trunk mode.

```
S1(config)# interface f0/1
S1(config-if)# switchport mode dynamic desirable
*Mar  1 05:07:28.746: %LINEPROTO-5-UPDOWN: Line protocol on Interface Vlan1, changed
state to down
*Mar  1 05:07:29.744: %LINEPROTO-5-UPDOWN: Line protocol on Interface FastEthernet0/1,
changed state to down
S1(config-if)#
*Mar  1 05:07:32.772: %LINEPROTO-5-UPDOWN: Line protocol on Interface FastEthernet0/1,
changed state to up
S1(config-if)#
*Mar  1 05:08:01.789: %LINEPROTO-5-UPDOWN: Line protocol on Interface Vlan99, changed
state to up
*Mar  1 05:08:01.797: %LINEPROTO-5-UPDOWN: Line protocol on Interface Vlan1, changed
state to up
```

You should also receive link status messages on S2.

```
S2#
*Mar  1 05:07:29.794: %LINEPROTO-5-UPDOWN: Line protocol on Interface FastEthernet0/1,
changed state to down
S2#
*Mar  1 05:07:32.823: %LINEPROTO-5-UPDOWN: Line protocol on Interface FastEthernet0/1,
changed state to up
S2#
*Mar  1 05:08:01.839: %LINEPROTO-5-UPDOWN: Line protocol on Interface Vlan99, changed
state to up
*Mar  1 05:08:01.850: %LINEPROTO-5-UPDOWN: Line protocol on Interface Vlan1, changed
state to up
```

b. Issue the **show vlan brief** command on S1 and S2. Interface F0/1 is no longer assigned to VLAN 1. Trunked interfaces are not listed in the VLAN table.

```
S1# show vlan brief

VLAN Name                             Status    Ports
---- -------------------------------- --------- -------------------------------
1    default                          active    Fa0/2, Fa0/3, Fa0/4, Fa0/5
                                                Fa0/7, Fa0/8, Fa0/9, Fa0/10
                                                Fa0/24, Gi0/1, Gi0/2
10   Student                          active    Fa0/6, Fa0/12, Fa0/13, Fa0/14
                                                Fa0/15, Fa0/16, Fa0/17, Fa0/18
```

© 2013 Cisco and/or its affiliates. All rights reserved. This document is Cisco Public.

```
                                                    Fa0/19, Fa0/20, Fa0/22, Fa0/23
20   Faculty                          active    Fa0/11, Fa0/21
99   Management                       active
1002 fddi-default                     act/unsup
1003 token-ring-default               act/unsup
1004 fddinet-default                  act/unsup
1005 trnet-default                    act/unsup
```

c. Issue the **show interfaces trunk** command to view trunked interfaces. Notice that the mode on S1 is set to desirable, and the mode on S2 is set to auto.

```
S1# show interfaces trunk

Port        Mode             Encapsulation  Status        Native vlan
Fa0/1       desirable        802.1q         trunking      1

Port        Vlans allowed on trunk
Fa0/1       1-4094

Port        Vlans allowed and active in management domain
Fa0/1       1,10,20,99

Port        Vlans in spanning tree forwarding state and not pruned
Fa0/1       1,10,20,99

S2# show interfaces trunk

Port        Mode             Encapsulation  Status        Native vlan
Fa0/1       auto             802.1q         trunking      1

Port        Vlans allowed on trunk
Fa0/1       1-4094

Port        Vlans allowed and active in management domain
Fa0/1       1,10,20,99

Port        Vlans in spanning tree forwarding state and not pruned
Fa0/1       1,10,20,99
```

Note: By default, all VLANs are allowed on a trunk. The **switchport trunk** command allows you to control what VLANs have access to the trunk. For this lab, keep the default settings which allows all VLANs to traverse F0/1.

d. Verify that VLAN traffic is traveling over trunk interface F0/1.

Can S1 ping S2? _____

Can PC-A ping PC-B? _____

Can PC-A ping PC-C? _____

Can PC-B ping PC-C? _____

Can PC-A ping S1? _____

Can PC-B ping S2? _____

© 2013 Cisco and/or its affiliates. All rights reserved. This document is Cisco Public.

Can PC-C ping S2? _____

If you answered no to any of the above questions, explain below.

_____

_____

Step 2: Manually configure trunk interface F0/1.

The **switchport mode trunk** command is used to manually configure a port as a trunk. This command should be issued on both ends of the link.

a. Change the switchport mode on interface F0/1 to force trunking. Make sure to do this on both switches.

```
S1(config)# interface f0/1
S1(config-if)# switchport mode trunk
```

b. Issue the **show interfaces trunk** command to view the trunk mode. Notice that the mode changed from **desirable** to **on**.

```
S1# show interfaces trunk

Port        Mode             Encapsulation  Status        Native vlan
Fa0/1       on               802.1q         trunking      99

Port        Vlans allowed on trunk
Fa0/1       1-4094

Port        Vlans allowed and active in management domain
Fa0/1       1,10,20,99

Port        Vlans in spanning tree forwarding state and not pruned
Fa0/1       1,10,20,99
```

Why might you want to manually configure an interface to trunk mode instead of using DTP?

_____

_____

Part 5: Delete the VLAN Database

⚠ WARNING: Submit your answer before doing this part ⚠

In Part 5, you will delete the VLAN Database from the switch. It is necessary to do this when initializing a switch back to its default settings.

Step 1: Determine if the VLAN database exists.

Issue the **show flash** command to determine if a **vlan.dat** file exists in flash.

```
S1# show flash

Directory of flash:/

    2  -rwx        1285   Mar 1 1993 00:01:24 +00:00  config.text
    3  -rwx       43032   Mar 1 1993 00:01:24 +00:00  multiple-fs
    4  -rwx           5   Mar 1 1993 00:01:24 +00:00  private-config.text
```

© 2013 Cisco and/or its affiliates. All rights reserved. This document is Cisco Public.

```
    5  -rwx    11607161   Mar 1 1993 02:37:06 +00:00  c2960-lanbasek9-mz.150-2.SE.bin
    6  -rwx         736   Mar 1 1993 00:19:41 +00:00  vlan.dat

32514048 bytes total (20858880 bytes free)
```

Note: If there is a **vlan.dat** file located in flash, then the VLAN database does not contain its default settings.

Step 2: Delete the VLAN database.

a. Issue the **delete vlan.dat** command to delete the vlan.dat file from flash and reset the VLAN database back to its default settings. You will be prompted twice to confirm that you want to delete the vlan.dat file. Press Enter both times.

```
S1# delete vlan.dat
Delete filename [vlan.dat]?
Delete flash:/vlan.dat? [confirm]
S1#
```

b. Issue the **show flash** command to verify that the vlan.dat file has been deleted.

```
S1# show flash

Directory of flash:/

    2  -rwx        1285   Mar 1 1993 00:01:24 +00:00  config.text
    3  -rwx       43032   Mar 1 1993 00:01:24 +00:00  multiple-fs
    4  -rwx           5   Mar 1 1993 00:01:24 +00:00  private-config.text
    5  -rwx    11607161   Mar 1 1993 02:37:06 +00:00  c2960-lanbasek9-mz.150-2.SE.bin

32514048 bytes total (20859904 bytes free)
```

To initialize a switch back to its default settings, what other commands are needed?

_____

_____

Reflection

1. What is needed to allow hosts on VLAN 10 to communicate to hosts on VLAN 20?

_____

_____

2. What are some primary benefits that an organization can receive through effective use of VLANs?

_____

_____

_____

_____

© 2013 Cisco and/or its affiliates. All rights reserved. This document is Cisco Public.